REVISIONS	SCHEDULES:	DRG.No. DATA.ZKM/30005

ALL DIMENSIONS ARE IN mm
DO NOT SCALE THE DRAWING

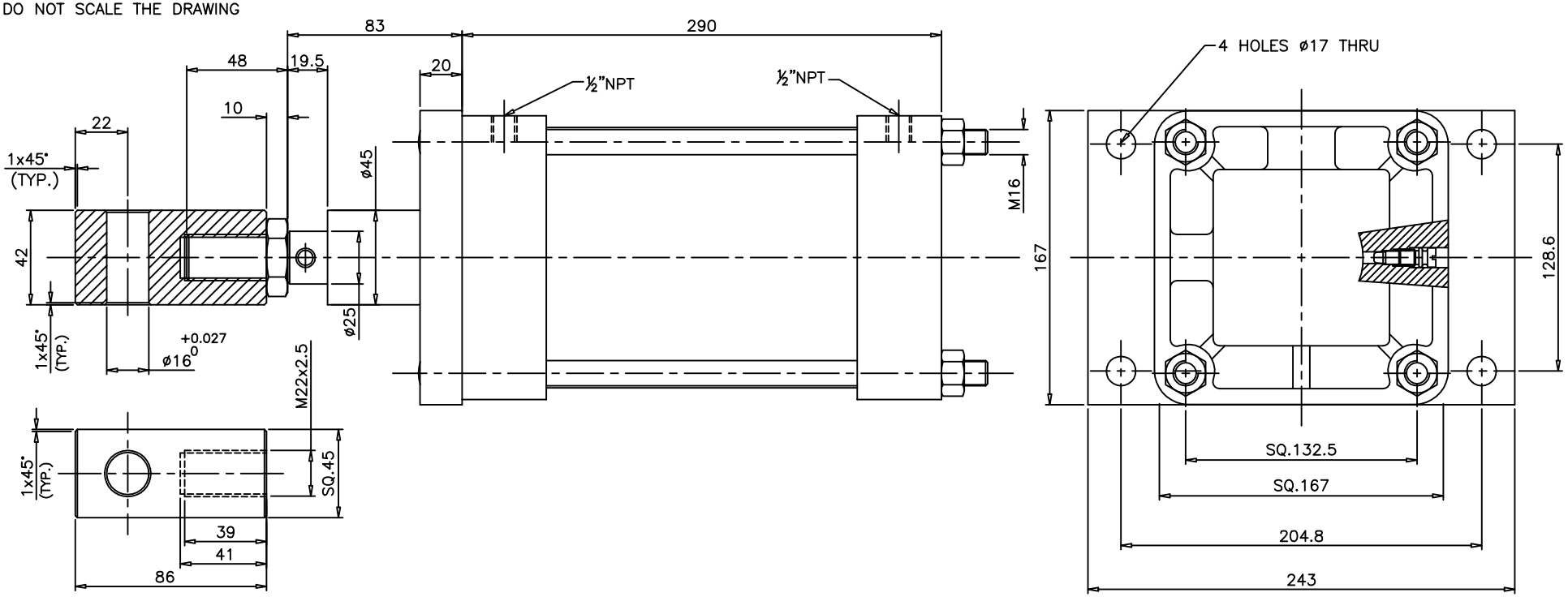

TECHNICAL DATA

1. CYLINDER TYPE : DOUBLE ACTING WITH BOTH ENDS CUSHOINED
2. BORE DIA : 150
3. PISTON ROD DIA : 25
4. STROKE : 140
5. OPERATING PRESSURE : 2 – 10 bar
6. OPRATING TEMP.MAX. : + 80°C
7. MOUNTINGS : FRONT FLANGE MTG. STYLE–G (SPL.)
   : ROD CLEVIS MTG. STYLE–F (SPL.)

REMOVE BURRS AND SHARP CORNERS

NUCON INDUSTRIES PRIVATE LIMITED

GENERAL TOLERANCES						
Dimensions	0.5 / 6	6 / 30	30 / 120	120 / 400	400 / 1000	
Tolerances ±	0.1	0.2	0.3	0.5	0.8	
Angular ±1/2°	Concentricity ø 0.1					

MATERIAL:

FINISH:

ASSEMBLY:
150mm BORE 140mm STROKE STAINLESS STEEL CYLINDER.

DRAWN	T.Prabhakar	30.07.2006
CHECKED		
APPROVED		

SCALE: NTS

TITLE: DATA SHEET

DRG.No. DATA.ZKM/30005

SHEET OF