Spring Centralised, Manually Operated
Supply sealed mid - position

ZM/1712/687

Type	: 5/3
Port Size	: G1/4
Operating Pressure	: 2 - 10 bar
Operating Temperature	: 0°C to +80°C

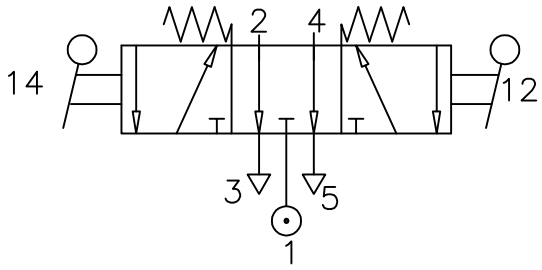

MATERIAL OF CONSTRUCTION

Body	: Aluminium
Seals	: Nitrile

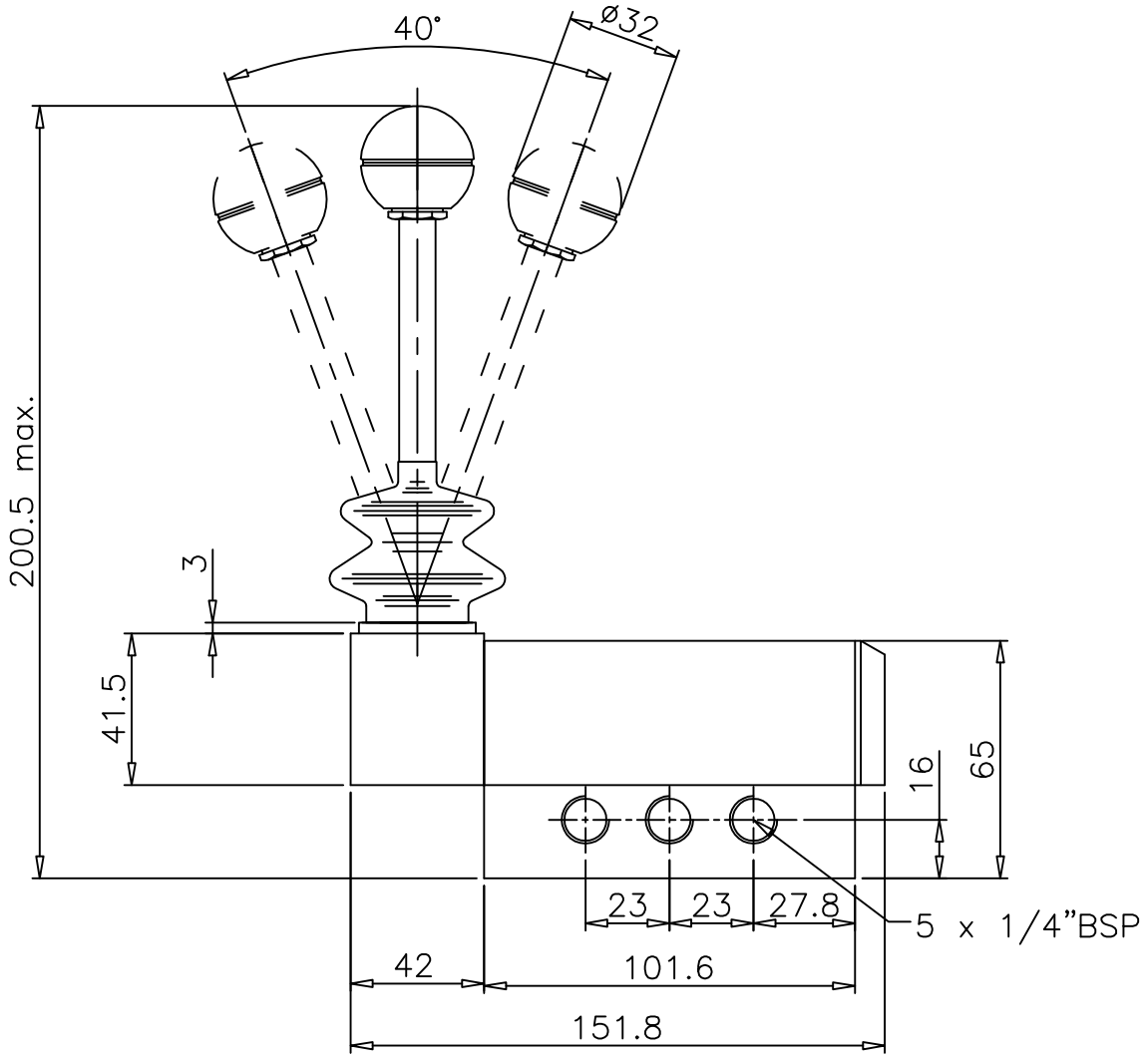

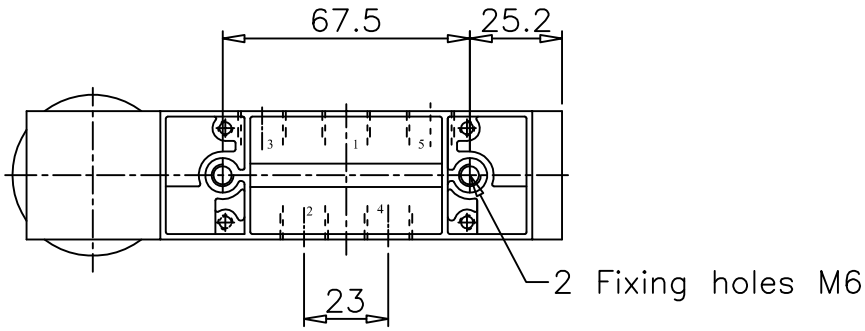

ALL DIMENSIONS ARE IN mm

NUCON INDUSTRIES PRIVATE LIMITED
88 , C.I.E , BALANAGAR ,
HYDERABAD – 500 037

DRAWN	T.Prabhakar	19.11.2007
CHECKED		
APPROVED		