ZM/840

UNI-DIRECTIONAL FLOW REGULATOR

Medium	: Compressed air, filtered, lubricated & non lubricated
Mounting	: Line mounted, concentrically
Port Sizes	: 3/4" BSP
Operating Pressure	: 0.3 to 16.7 bar
Operating Temperature	: 0°C +80°C

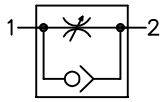

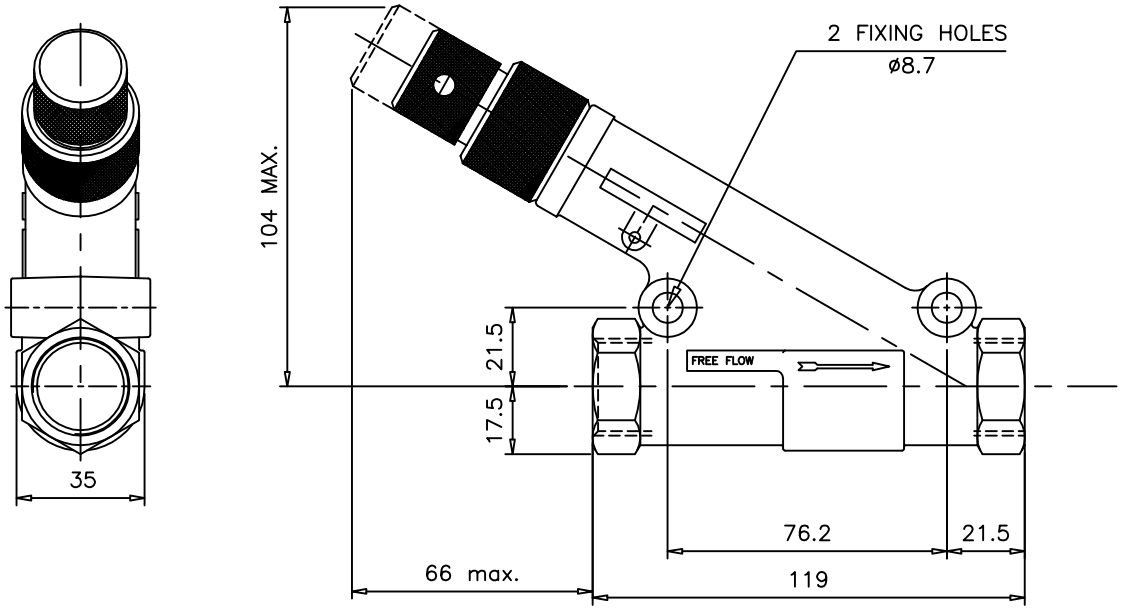

ALL DIMENSIONS ARE IN mm

NUCON INDUSTRIES PRIVATE LIMITED
88 , C.I.E , BALANAGAR ,
HYDERABAD – 500 037

DRAWN	T.Prabhakar	06.09.2008
CHECKED		
APPROVED		