REVISIONS	SCHEDULES: ZPRM/8032	DRG.No. ZPRM/8032/50

ALL DIMENSIONS ARE IN mm
DO NOT SCALE THE DRAWING

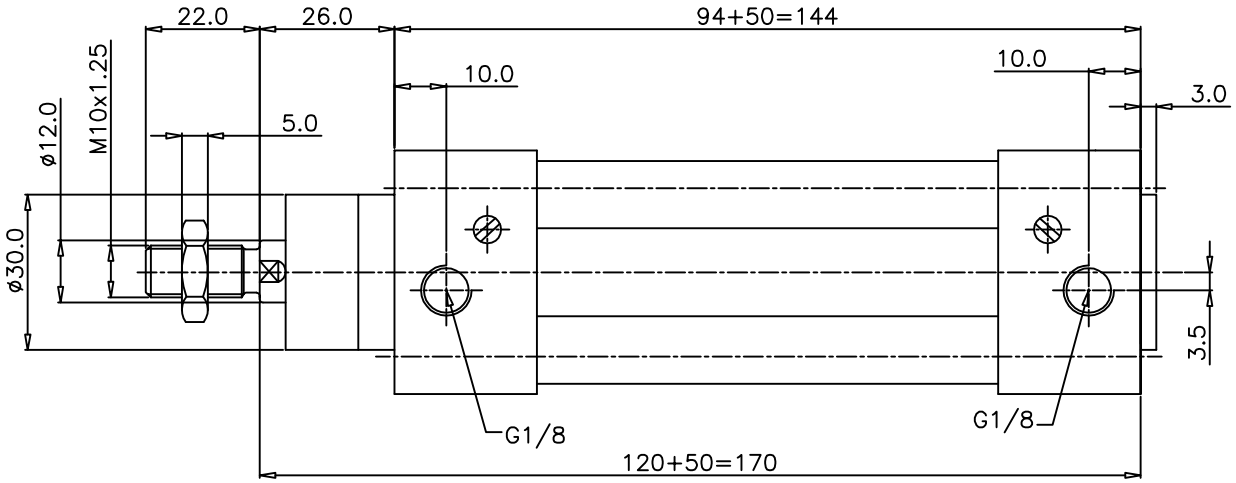

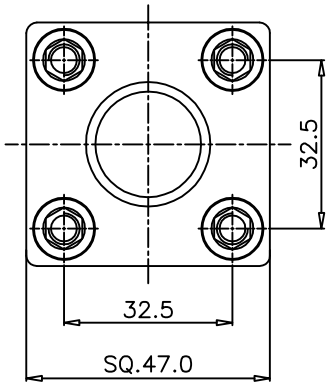

REMOVE BURRS AND SHARP CORNERS

NUCON INDUSTRIES PRIVATE LIMITED

ASSEMBLY: 32mm BORE 50mm STROKE STD. CYLINDER	DRAWN	V.VINAY	28.08.2008
	CHECKED		
	APPROVED		
SCALE:1:1 TITLE: DATA SHEET	DRG.No. ZPRM/8032/50		
	SHEET	OF	