REVISIONS	SCHEDULES:	DRG.No. DATA.ZRM/20001

ALL DIMENSIONS ARE IN mm
DO NOT SCALE THE DRAWING

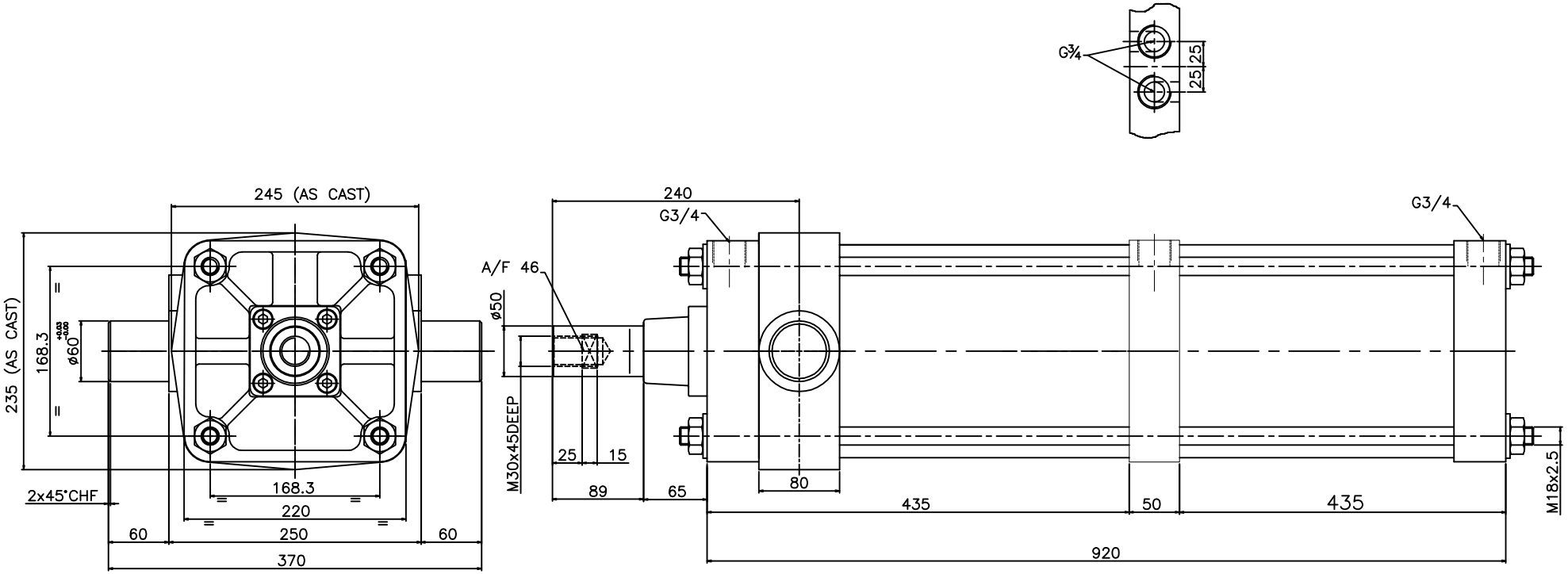

TECHNICAL DATA

1. CYLINDER TYPE : D.A WITH BOTH ENDS CUSHIONED (TANDEM TYPE)
2. BORE DIA : 8" (203.2)
3. STROKE : 300
4. PISTON ROD DIA : 50
5. OPERATING PRESSURE : 2–10 bar
6. OPRATING TEMP.MAX. : + 120°C

REMOVE BURRS AND SHARP CORNERS

NUCON INDUSTRIES PRIVATE LIMITED			
ASSEMBLY: 8" BORE 300 STROKE TANDAM CYLINDER.	DRAWN	T.Prabhakar	12.07.2006
	CHECKED		
	APPROVED		
SCALE: NTS	TITLE: DATA SHEET	DRG.No. DATA.ZRM/20001	
		SHEET	OF