PILOT ACTAUTED, SET RESET

ZV61B5DDA-X5020

Type	**: 5/2 INLINE Valve Pressure actuated**
Port Size	**: G 1/4**
Operating Pressure	**: 0-10 bar**
Operating Temperature	**: -10°C to +70°C**
Pilot Pressure	**: 1.5-10 bar**

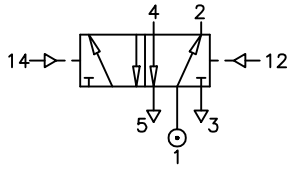

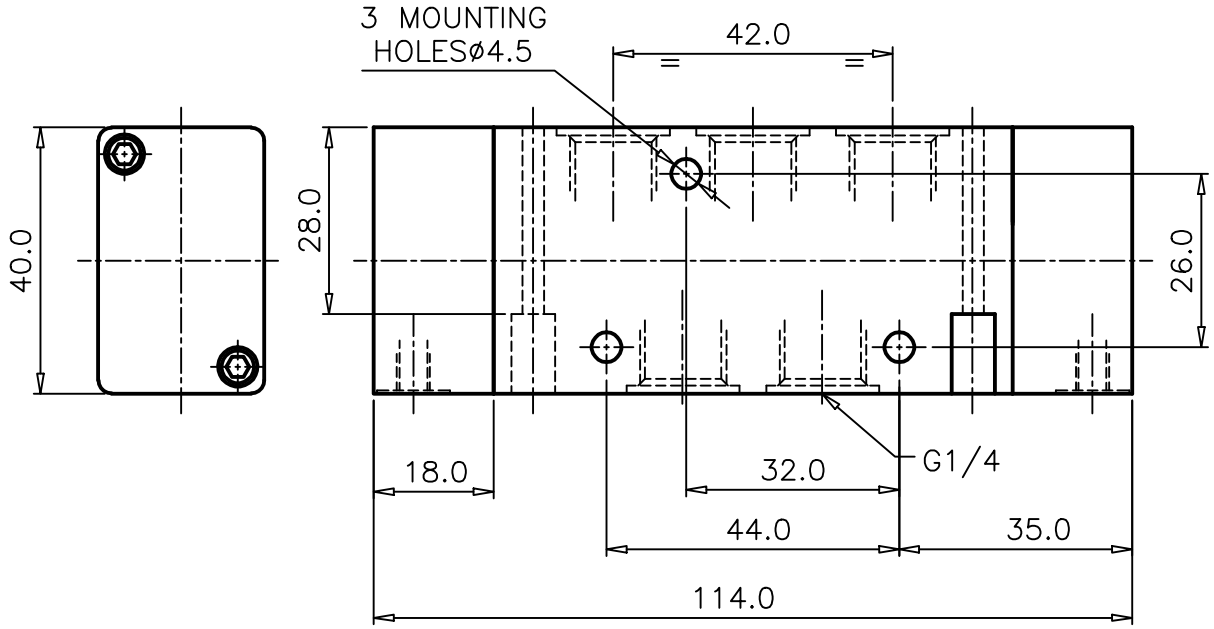

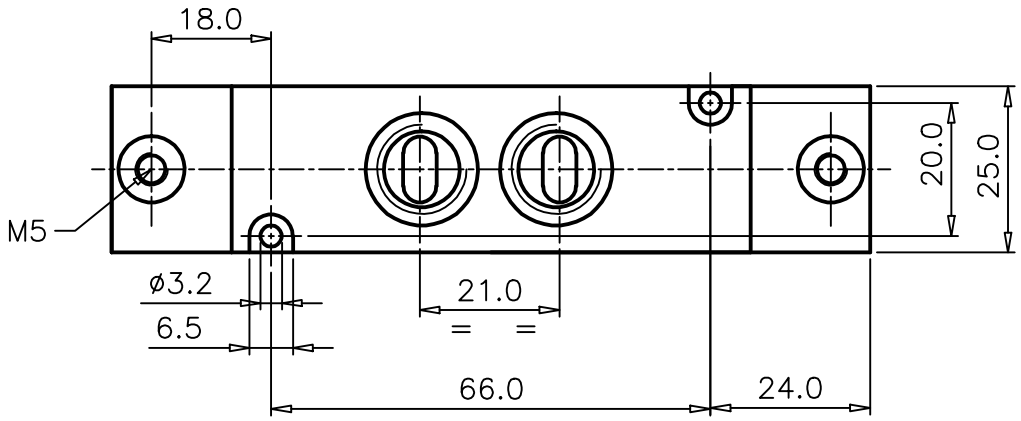

ALL DIMENSIONS ARE IN mm

NUCON INDUSTRIES PRIVATE LIMITED
88 , C.I.E , BALANAGAR ,
HYDERABAD – 500 037

DRAWN	T.Prabhakar	02.07.2008
CHECKED		
APPROVED		